British Hedgehog Preservation Society

Hedgehog Homes

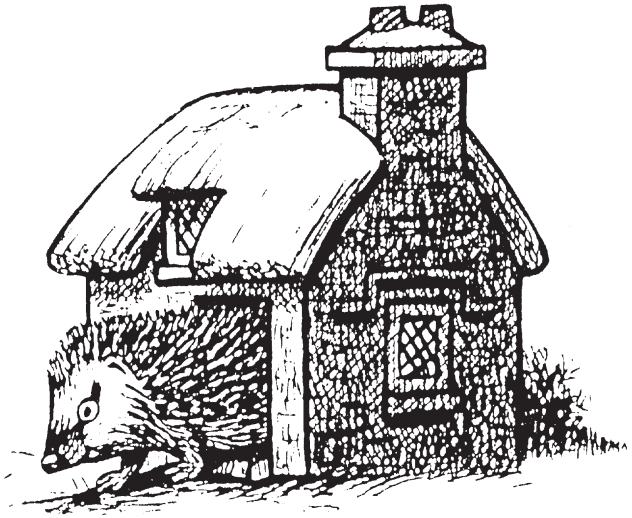

Part of the

Know your Hedgehog series

PUBLISHED BY THE BRITISH HEDGEHOG PRESERVATION SOCIETY,
HEDGEHOG HOUSE, DHUSTONE, LUDLOW, SHROPSHIRE SY8 3PL
www.britishhedgehogs.org.uk

HEDGEHOG HOMES

IN THE WILD
Efficient winter nests are essential if hedgehogs are to survive hibernation. Thus, in autumn, they begin to collect leaves, grass, straw, bracken, reeds etc. and use these materials for building their own nests under hedgerows, fallen logs or piles of brushwood. These "HIBERNACULA" prove to be surprisingly waterproof and good insulation against the cold.

IN THE NATURAL GARDEN
Most gardens have a supply of the materials mentioned above and suitable sites for nests - under sheds, compost heaps, shrubs and piles of leaves or behind stacks of logs and under spare building materials. In these circumstances, if hedgehogs want to spend a winter here, they should be able to get on and build their own shelters. However, you may wish to provide your 'resident' hedgehog with, (or encourage any in the vicinity to become 'resident' in your garden by the provision of), a more permanent structure.

IN THE MORE FORMAL GARDENS AND IN OTHER ENCLOSED AREAS
Where hedgehogs are being cared for (eg after an injury or when orphaned) they will probably need nests made for them.

HEDGEHOG HOUSE - MARK I *(Council Tax Band "A")*
This is a very simple affair and easy to make. Get a big, thick cardboard box and cut two side air vents about 15cm by 5cm and an entrance of 13cm square. Put some dry leaves or straw inside with clean, dry grass or straw on top and tuck the box near a hedge, if possible with the entrance facing South. The top of the box should then be covered with a small piece of plastic sheeting, for example an "opened up" old carrier bag. Twigs should be put all round to make a dome and then covered with dry grass and leaves.

HEDGEHOG HOUSE - MARK II *(Council Tax Band "H")*
This is a design that the Society recommends and is a more permanent type of home. Any available timber can be used (old or new) but the better it is made, the longer it will last. The wood can be treated with water based preservative but not creosoted or tanalised. Do not nail down the roof as you may need to clean the box in the future. The entrance tunnel could be constructed with old bricks placed on top of each other with a piece of slate with a brick on top for the roof. Make sure the entrance is kept clear and avoid the temptation to disturb the hedgehogs. The finished home could be covered with plastic sheeting, soil and twigs placed on top, or left as it is. Straw and any leaves left outside may be taken in and used for bedding by any prospective resident.

See illustration opposite.

The wood we have used is 2cm thick, if the wood you use is a different thickness, you will need to adjust the measurements to suit.

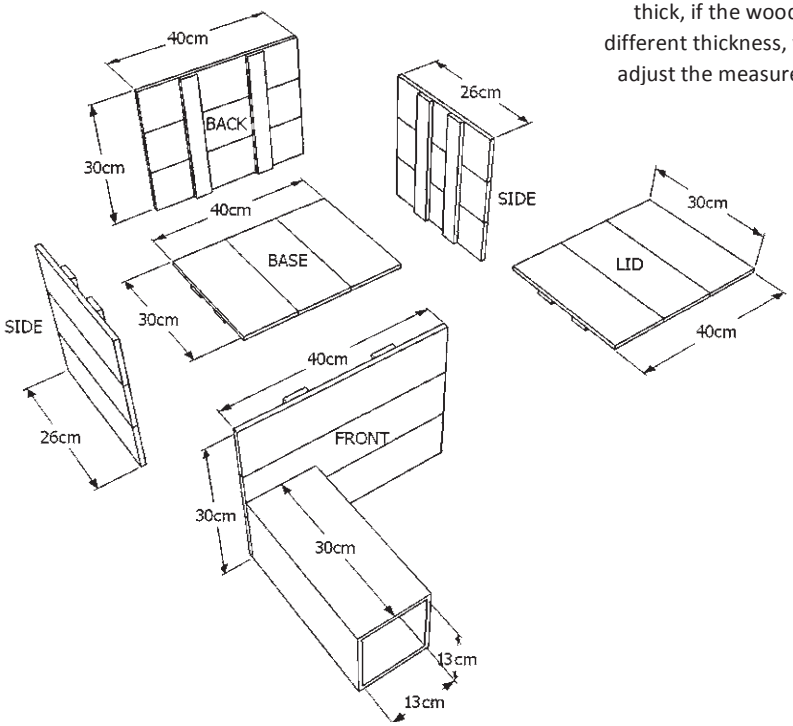

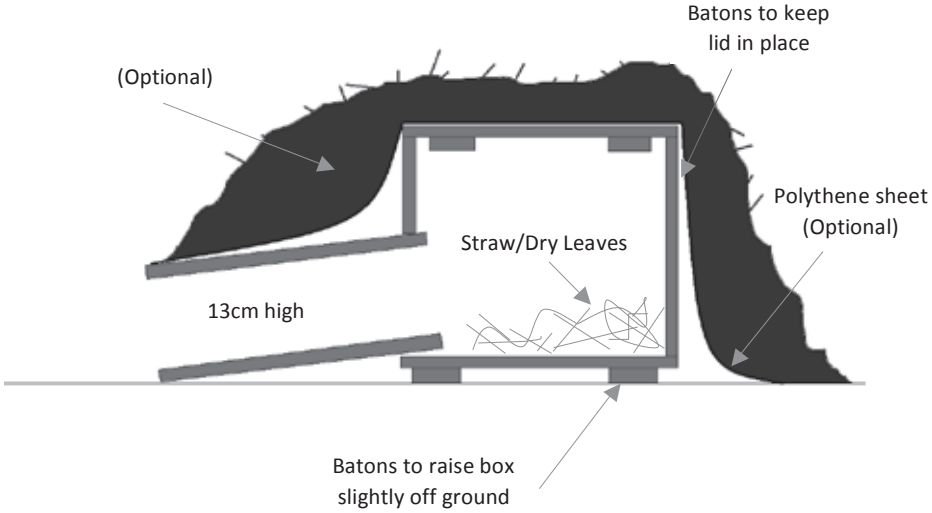

N.B. Do not creosote or treat wood.

HEDGEHOG HOUSE - MARK III *(Council Tax Band "D")*

A plastic storage box or an upturned milkcrate (preferably plastic) buried into a mound will probably attract hedgehogs. A hedgehog "Prefab"! Cut out any internal partitions of the crate with a coping saw or secateurs and make the entrance about 13cm square in one end of the crate, avoid leaving "rough" edges. Set the crate into your rubbish mound and camouflage it well outside. Inside you can make it more inviting to hedgehogs by half filling with dry leaves or straw.

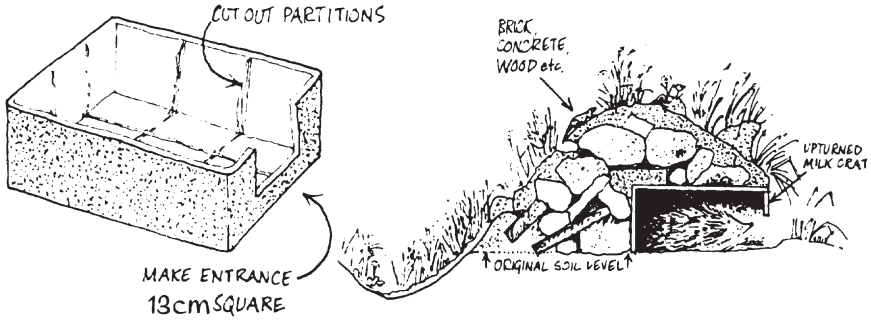

HELPFUL HINTS

When you have made a hedgehog house, place it in a quiet part of your garden, preferably against a bank, wall or fence and hope that you will have a visit from a friend seeking a home. Make sure the entrance to the house does not face North or North East, thus avoiding the cold winter winds. It may then become the winter home for some lucky hedgehog. If female, she may even have her young in it in the spring. After winter use, late March/early April, it may need to be cleaned out and, to some extent fumigated or washed out. To make sure there is nobody in residence, put a small light obstruction in the entrance to see whether it is pushed away overnight, if it isn't this is an indication that the hedgehog may no longer be in residence (but take care just in case). You can clean the house using an organic Pyrethrum powder, suitable for caged birds. DO NOT CLEAN IF A HEDGEHOG IS IN RESIDENCE.

On no account should the hedgehog house be creosoted or "treated" as the fumes remain for a long time and can be very harmful.

There are various "ready-made" hedgehog homes on the market, including the one that can be obtained from our Hogalogue.

WHY NOT JOIN THE BRITISH HEDGEHOG PRESERVATION SOCIETY?

For further information please send a s.a.e. to:-
The British Hedgehog Preservation Society,
Hedgehog House, Dhustone, Ludlow, Shropshire SY8 3PL
Tel: 01584 890801 E-mail: info@britishhedgehogs.org.uk
www.britishhedgehogs.org.uk

Price 25p

L5.03/14©

barringtonprint, Leominster

REG CHARITY NO. 1164542 (formerly 326885)